Faculty of Engineering
University of Jaffna

EC6020 – EMBEDDED SYSTEMS DESIGN

PROJECT PROPOSAL

Smart Bridge Safety Monitoring System

By :

2022/E/039 WIMALASOORIYA G.H.N.P.D.
2022/E/048 BANDARA H.G.T.D.
2022/E/049 HERATH H.M.I.U.
2022/E/056 WIJESINGHE H.M.S.S.
2022/E/085 MAHAGAMAGE M.V.I.

TITLE : SMART BRIDGE SAFETY MONITORING SYSTEM

EXECUTIVE SUMMARY

This project proposes a low-cost, microcontroller-based bridge safety monitoring system designed specifically for flood conditions in Sri Lanka. The system continuously monitors structural and environmental parameters and provides early warnings.

INTRODUCTION

Sri Lanka frequently experiences natural disasters such as floods, landslides, and prolonged heavy rainfall, especially during monsoon seasons. One of the most critical yet often overlooked consequences of these disasters is the structural damage to bridges. Rising water levels, excessive vibrations caused by strong currents, and gradual structural deformation can weaken bridges, leading to partial or total collapse. Such failures pose severe risks to human life, disrupt transportation networks, and cause significant economic losses.

This project introduces a Smart Bridge Safety Monitoring System implemented using the ATmega328 microcontroller chip. The system uses multiple sensors to monitor real-time conditions and automatically determines whether a bridge is SAFE or UNSAFE, providing immediate alerts to prevent accidents and improve disaster response.

DESIGN OVERVIEW

SYSTEM ARCHITECTURE

The proposed system consists of a standalone embedded unit installed on a bridge structure. It continuously collects data from multiple sensors measuring:

- Water level near bridge pillars
- Structural vibration
- Strain and tilt angle of the bridge

These sensor signals are processed by a microcontroller. When any parameter exceeds predefined safe thresholds, the system activates a local warning alarm (buzzer and warning LED). Optionally, the system can be extended to send alerts via a communication module.

High-Level Architecture Description:

- Sensors → Signal Conditioning → Microcontroller
- Microcontroller → Decision Algorithm (Software)
- Output → Alarm System (Buzzer, LEDs)

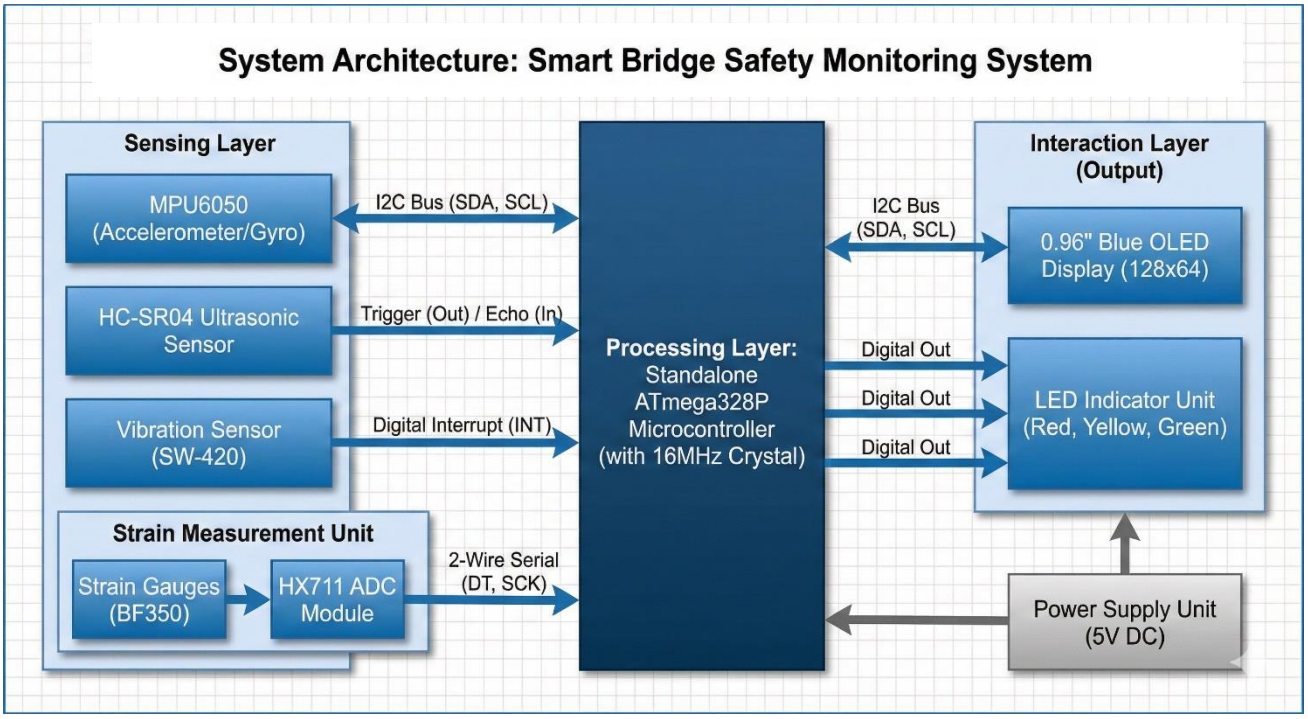

FIGURE 01 : High Level Architecture Diagram of Smart Bridge Safety Monitoring System

COMMUNICATION PROTOCOLS

- **I2C (Inter-Integrated Circuit)**
  - **Component:** MPU6050 (Accelerometer & Gyroscope).
  - The ATmega328P features a dedicated hardware TWI (Two-Wire Interface) on pins **PC4 (SDA)** and **PC5 (SCL)**. I2C allows the system to read complex 6-axis motion data using only two wires. This is essential for monitoring bridge tilt and seismic activity without exhausting the chip's limited GPIO pins.
- **Synchronous 2-Wire Serial (Bit-Banging)**
  - **Component:** HX711 (24-bit ADC for BF350 Strain Gauges).
  - The HX711 chip connects to two pins. The ATmega328P reads it by sending a clock signal to get high-resolution weight data, as its own built-in converter isn't sensitive enough to measure the micro-voltage changes produced by bridge strain.
- **Digital Pulse-Width/Timing Protocol**
  - **Component:** HC-SR04 (Ultrasonic Sensor).
  - This protocol relies on precise timing of Transmit and Receive signals. The ATmega328P sends a 10µs Trigger pulse and utilizes its internal 16-bit Timer1 to measure the duration of the Echo pulse. This calculation is used to monitor water levels under the bridge to provide flood warnings.
- **External Hardware Interrupts (Edge Triggering)**
  - **Component:** SW-420 (Vibration Sensor).
  - The vibration sensor is connected to Pin PD2 (INT0). Unlike checking the sensor periodically, the Interrupt protocol allows the ATmega328P to instantly detect a high-frequency vibration or impact. This ensures the safety status is updated the millisecond a collision occurs, even if the MCU is busy processing other data.
- **Direct GPIO Logic Signaling**
  - **Component:** 3-LED Safety Indicators (Green, Yellow, Red).
  - Standard Digital I/O protocol (HIGH/LOW states). The ATmega328P communicates the bridge's safety status to the public by toggling specific pins. For example, if the software detects a DANGER state via the HX711 protocols, it sends a HIGH signal to the Red LED pin and a LOW signal to others.

CIRCUIT DESIGN

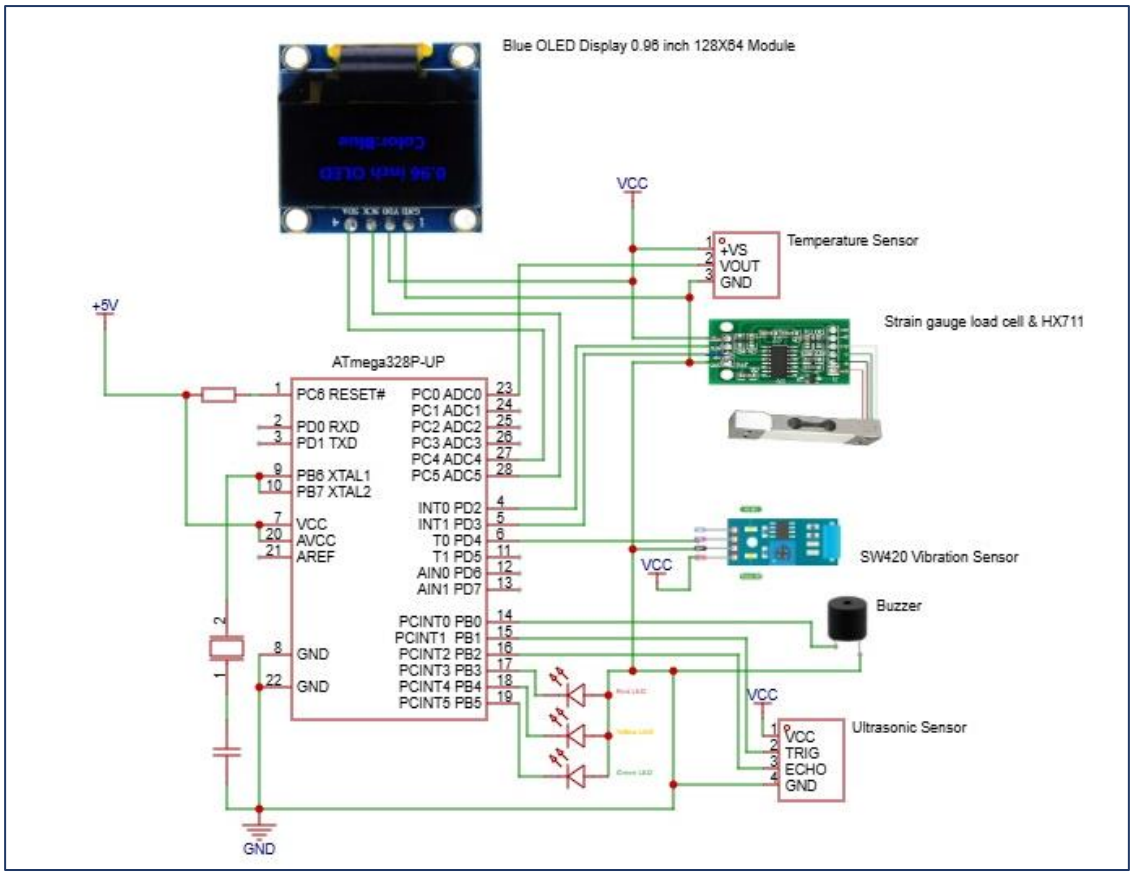

FIGURE 02: Circuit Design Of The Proposed Smart Bridge Safety Monitoring System

EXPLANATION OF THE CIRCUIT DIAGRAM:

The circuit diagram of Smart Bridge Safety Monitoring System controlled by an ATmega328P microcontroller. It collects data from different sensors and shows the results on an OLED display.

- **ATmega328P**: Main controller that reads all sensor data and makes decisions.
- **Load cell + HX711**: Measures strain on the bridge.
- **Tilt sensor**: Measures temperature changes.
- **SW420 vibration sensor**: Detects vibrations or shocks.
- **Ultrasonic sensor**: Measures distance (for crack or level detection).
- **OLED display (0.96”)**: Displays sensor readings and system status.
- **Buzzer**: Gives an alarm when unsafe conditions are detected.
- **Power supply (5V)**: Powers the entire circuit.

Overall, the system monitors bridge safety conditions and alerts when abnormal values are detected.

TECHNOLOGIES TO BE USED

HARDWARE COMPONENTS

Core Microcontroller

- ATmega328P-PU: Standalone 8-bit AVR microcontroller used as the main processing unit.
- 16 MHz Crystal Oscillator + 22 pF Capacitors: Provides stable and accurate system timing.

Structural Health Sensors

- BF350 Strain Gauge: Detects micro-level structural stress and deformation.
- HX711 (24-bit ADC): Amplifies and digitizes low-level strain gauge signals.

Motion and Impact Sensors

- MPU6050: 6-axis accelerometer and gyroscope for vibration, tilt, and inclination monitoring.
- SW-420 Vibration Sensor: Detects sudden shocks and abnormal impacts.

Environmental Monitoring

- HC-SR04 Ultrasonic Sensor: Measures water level variations near bridge structures.

User Interface

- 0.96" OLED Display (I2C): Displays real-time sensor data and system status.
- Status LEDs (Red, Yellow, Green): Indicates danger, warning, and safe conditions.

Power Management

- LM7805 Voltage Regulator: Supplies regulated 5V to the system.
- Decoupling Capacitors (10 µF, 100 nF): Reduce noise and stabilize power.

SOFTWARE TECHNOLOGIES

Programming Language

- Embedded C++: Efficient low-level programming for sensor interfacing and real-time processing.

Libraries / APIs

- Wire.h: Handles I2C communication between sensors and display.
- Adafruit SSD1306 & GFX: Used for OLED graphics and data visualization.
- HX711 Library: Reads and processes strain gauge data.

Development Toolchain

- AVR-GCC: Compiles source code into machine-level instructions.
- AVRDUDE: Programs the firmware into the ATmega328P via ISP.

UNIQUENESS AND INNOVATION

Our Smart Bridge Safety Monitoring System stands out because it is a low-cost, standalone solution designed specifically for flood-prone areas. Here is how it differs from existing systems:

- **Comprehensive Monitoring:** Unlike systems that track only one factor, ours monitors water levels, vibration, strain, and weather simultaneously. This gives a complete picture of the bridge's health.
- **Built for Floods:** While most systems look for general aging (like cracks), our system is specifically designed to detect flood risks and water damage, which is critical for disaster-prone regions like Sri Lanka.
- **Affordable & Accessible:** We replaced expensive infrastructure with low-cost embedded microcontrollers. This makes the system affordable and practical for widespread use in developing countries.
- **Instant On-Site Decisions:** The system doesn't need to send data to a cloud server to think. It processes data locally and triggers immediate alarms (buzzers and lights) the moment safety limits are crossed.
- **Works Without Internet:** By processing data on the device, our system ensures safety even if the internet connection fails. It is a self-contained unit that does not rely on external networks.
- **Rugged & Power Efficient:** Designed for harsh environments, it uses robust components that consume very little power, ensuring it keeps running during storms or power outages.
- **Customizable:** Every bridge is different. Our system allows engineers to set specific safety thresholds for each location and logs data locally for future analysis.

MARKET COMPARISON

FEATURE	EXISTING SYSTEMS	OUR SMART BRIDGE SAFETY MONITORING SYSTEM
Real-Time Operation	Yes (Expensive)	Yes (Low-cost & Embedded)
Multi-Parameter Monitoring	Limited (Vibration/Strain)	Comprehensive (Water level, Vibration, Strain, Tilt, Environmental)
Flood and Scour Monitoring	Rare	Core Feature
Cost	High	Low
Autonomous Decision-Making	No (Cloud-based)	Yes (Local Decision & Alerts)
Power Efficiency	Limited	High (Embedded, Low Power)
Immediate Local Alerts	No	Yes (Buzzer, LED)

BUDGET

COMPONENTS	QUANTITY	UNIT PRICE(LKR)	TOTAL(LKR)
ATmega328 P-UP	1	950	950
28-Pin DIL DIP IC Socket PCB Mount Connector 28pins	1	25	25
Ultrasonic Sensor	1	1,000	1,000
SW420 Vibration Sensor	1	195	195
Strain Gauge load cell	1	450	450
HX711 Module	1	260	260
LEDs	5	2	10
Buzzer	1	75	75
Blue OLED Display 0.96 inch 128X64 Module	1	700	700
Power supply(9V Battery)	1	180	180
Popsicle sticks	1 pack	700	700
Jumper wires	-	400	400
Crystal Oscillator 16MHz HC-49S	1	40	40
Capacitors	1	5	5
Resistors	3	5	15
Total cost			**5,005/=**

TIMELINE

WEEK	PHASE	ACTIVITIES
Week 1	Project Initiation	Problem identification, understanding bridge failures in Sri Lanka, initial literature survey
Week 2	Literature Review	Review of related systems, study of sensors and existing monitoring systems
Week 3	Proposal Finalization	System concept finalization, feasibility analysis, proposal documentation
Week 4	System Design	Overall system architecture design, block diagrams, protocol selection
Week 5	Hardware Design	Sensor selection, circuit design, simulation
Week 6	PCB & Firmware Prep	PCB layout design, microcontroller pin mapping, firmware structure planning
Week 7	Prototype Development	PCB fabrication/assembly, initial firmware coding
Week 8	Integration & Testing	Sensor interfacing, basic data acquisition, alarm triggering
Week 9	System Improvement	Bug fixing, sensor calibration, threshold tuning
Week 10	Advanced Features	Improved fault-detection logic, noise filtering, power optimization
Week 11	System Validation	Stress testing, simulated flood/vibration testing
Week 12	Documentation	Final report writing, diagrams, results analysis
Week 13	Final Refinement	Demo preparation, presentation slides, final testing
Week 14	Final evaluation	Final system demonstration